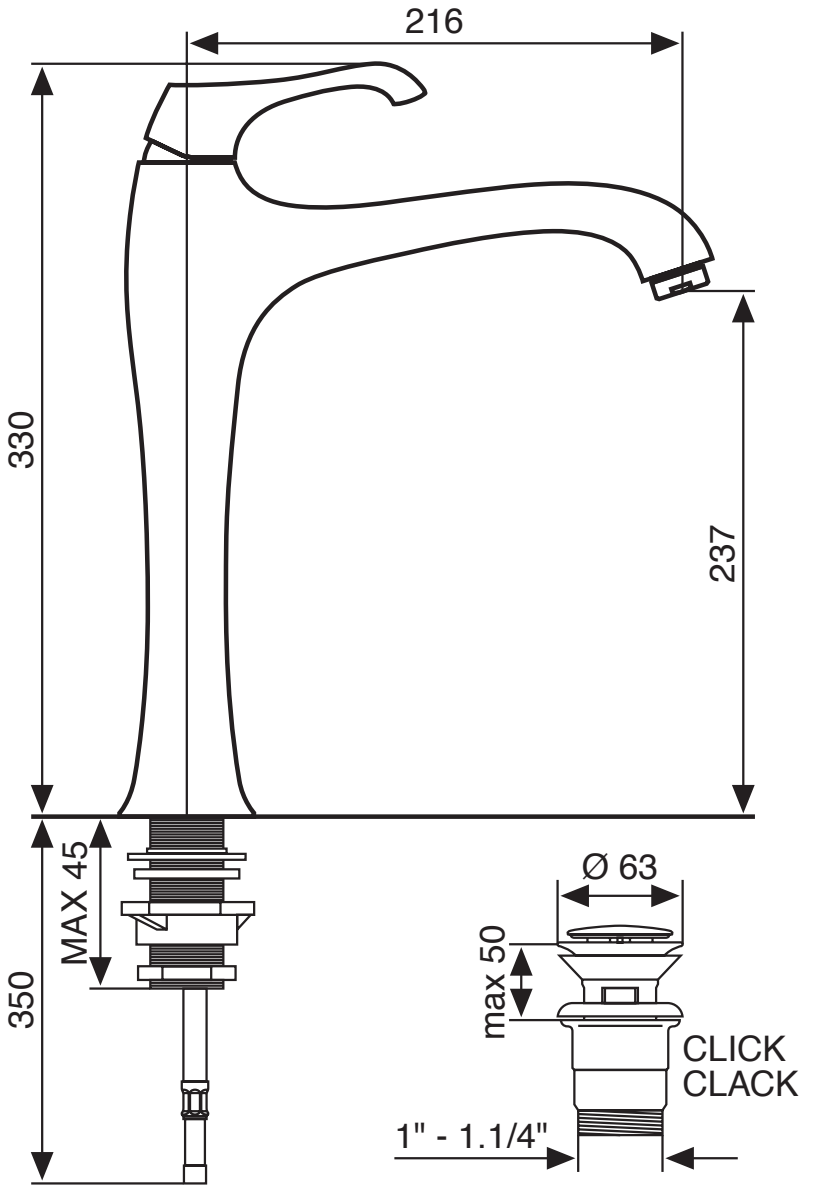ARES CR 76006